Electrolux PROFESSIONAL

Modular Cooking Range Line 700XP Electric Grill Top HP 1200mm (Marine)

ITEM #

MODEL #

NAME #

SIS #

AIA #

371306 (E7JJCJAOMIG)	Large module electric grill top HP (high performance). Heating via incoloy armoured heating elements positioned under removable cooking grid, integrated water tap, fixed well with drain, heat boost deflectros, WRAS - marine

Short Form Specification

Item No.

Heating via incoloy armoured heating elements positioned under the cooking grid. Cooking surface grids are easily removable for cleaning. Heating elements can be tilted. Integrated water tap. Fixed well with drain. Extra strength work top in heavy duty 2 mm stainless steel. Right-angled side edges to allow flush-fitting junction between units. WRAS compliant. 400 V Version.

APPROVAL:

Main Features

- Heating elements tilt 90° for easy cleaning.
- Removable 2mm thick steel U-shaped grids in AISI 441 stainless steel for fast heating of cooking surface.
- Led warning indicator to give an alarm when well is empty.
- Top configuration allows installation on ambient base.
- Incoloy armoured heating elements positioned under the cooking grid.
- Each bank of elements has an independent power regulation through a control knob.
- Power indicator light.
- Fixed well with drain to collect residual cooking juices and grease.
- Large drain protected by overflow and filter.
- Water must be added to well before operation.
- Water filling tap with knob control.
- Removable stainless steel deflectors to recuperate heat and reduce cooking time.
- Stainless steel splash guards on sides of cooking surface. Splash guards can be easily removed for cleaning.
- Top configuration can be installed on refrigerated / freezer base with limited layout options.

Construction

- Unit is 730mm deep to give a larger working surface area
- All exterior panels in Stainless Steel with Scotch Brite finishing.
- One piece pressed 1.5 mm work top in Stainless steel.
- Model has right-angled side edges to allow flush fitting joints between units, eliminating gaps and possible dirt traps.

Included Accessories

- 1 of Scraper for HP electric grill PNC 206436

Optional Accessories

- Junction sealing kit PNC 206086 ❑
- Support for bridge type installation, 1200mm PNC 206139 ❑
- Support for bridge type installation, 1400mm PNC 206140 ❑
- Support for bridge type installation, 1600mm PNC 206141 ❑
- Right and left side handrails PNC 206307 ❑
- Back handrail 1200 mm PNC 206309 ❑
- Scraper for HP electric grill PNC 206436 ❑
- Drain extension for Electric grill HP PNC 206437 ❑
- Frontal handrail, 1200mm PNC 216049 ❑
- Frontal handrail, 1600mm PNC 216050 ❑
- 2 side covering panels for top appliances PNC 216277 ❑

Modular Cooking Range Line
700XP Electric Grill Top HP 1200mm (Marine)

Front

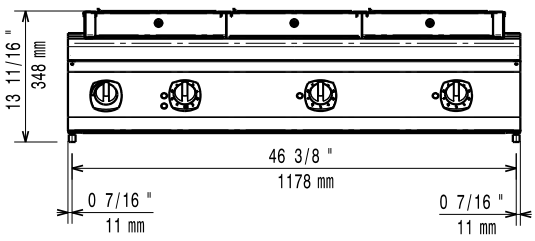

Side

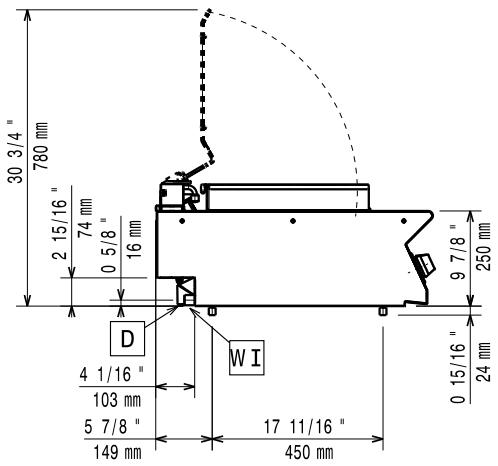

D	=	Drain
EI	=	Electrical inlet (power)
EQ	=	Equipotential screw
WI	=	Water inlet

Top

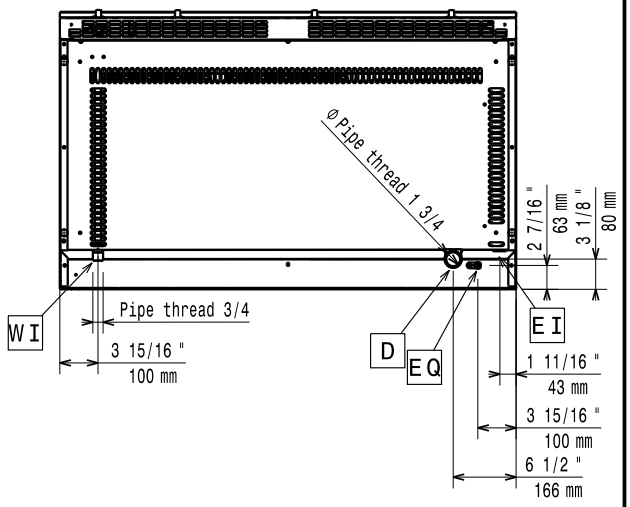

Modular Cooking Range Line
700XP Electric Grill Top HP 1200mm (Marine)

The company reserves the right to make modifications to the products without prior notice. All information correct at time of printing.

2026.02.23

Modular Cooking Range Line 700XP Electric Grill Top HP 1200mm (Marine)

Electric

Supply voltage:	440 V/3 ph/50/60 Hz
Predisposed for:	
Electrical power, max:	11.25 kW

Key Information:

If appliance is set up either next to or against temperature sensitive furniture or similar, a safety gap of approximately 150 mm should be maintained or some form of heat insulation fitted.

External dimensions, Width:	1200 mm
External dimensions, Depth:	730 mm
External dimensions, Height:	250 mm
Net weight:	107 kg
Certification group:	HEG7E3
Cooking surface width:	1065 mm
Cooking surface depth:	400 mm

The company reserves the right to make modifications to the products without prior notice. All information correct at time of printing.